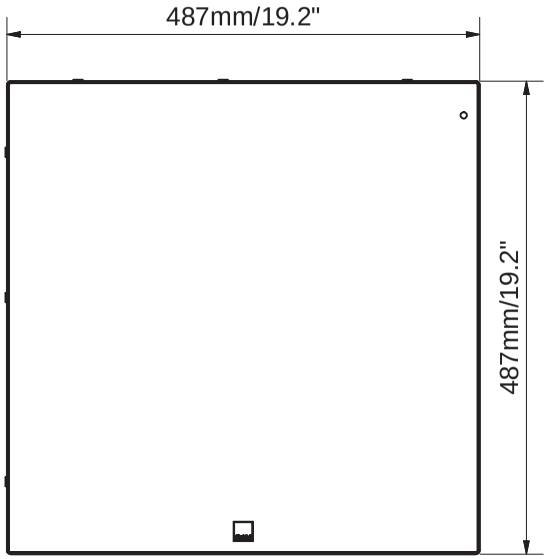

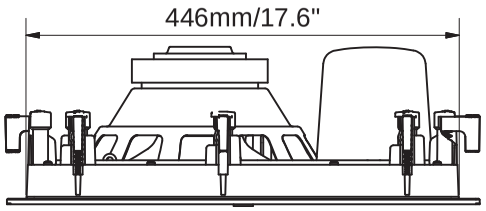

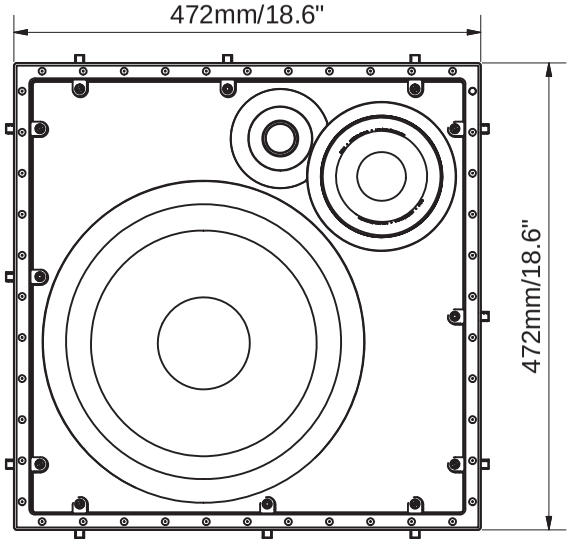

DOGLEG SPAN

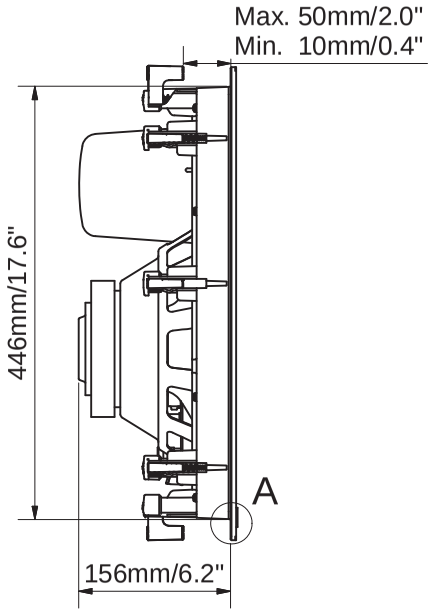

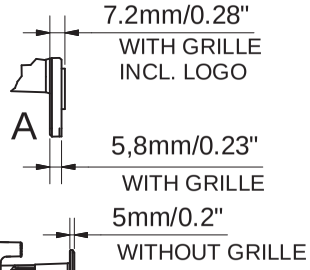

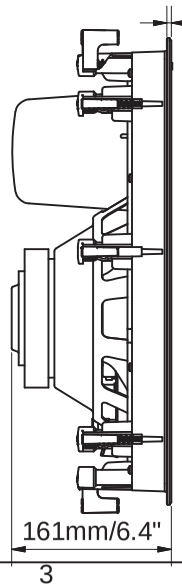

REVERSED DOGLEG POSITION

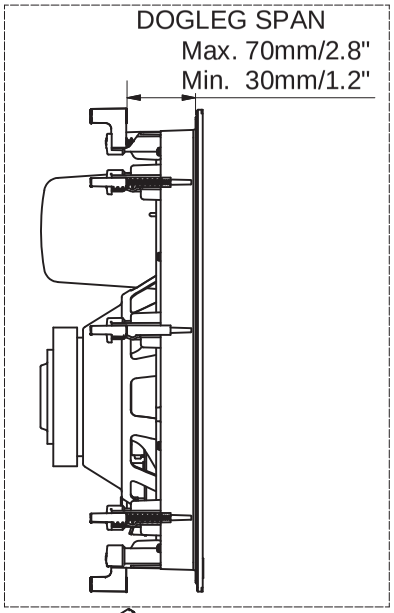

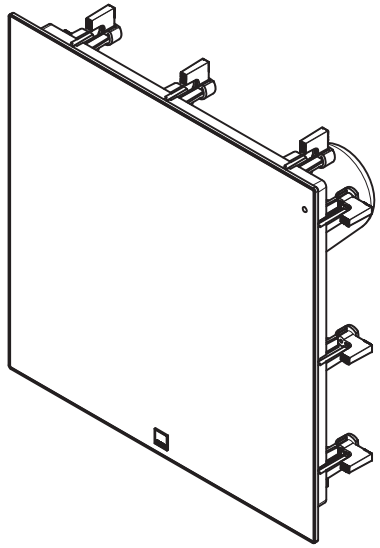

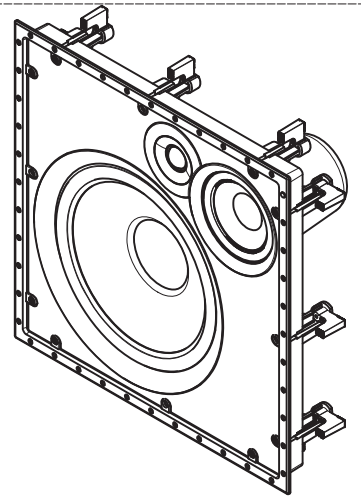

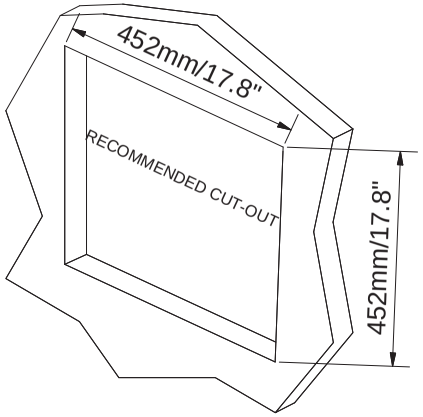

DALI PHANTOM H-120 :

RECOMMENDED WORKING VOLUMEN: 50 - 100 liter

Weight 9.0kg.

RELEASED FOR MARKETING

Susanne Beltoft
2015.06.17 11:26:09
+02'00'

Material:				General tolerances: DS/ISO 2768	From mm: To mm (incl.):	0,5 3	3 6	6 30	30 120	120 400	400 1000	1000 2000
					Fine ±	0,05	0,05	0,1	0,15	0,2	0,3	0,5
Drawn by : rt	Created : 09-03-2015	Scale:			Medium ±	0,1	0,1	0,2	0,3	0,5	0,8	1,2
					Rough ±	0,2	0,3	0,5	0,8	1,2	2,0	3,0

Part no: 262060 PHANTOM H_120

Drawing no.: 262060 PHANTOM H-120 Outer Dimension

Revision: A 11-05-2015

Sheet: 1 /2

Format: A3

DALI A/S
Dali Allé 1
DK-9610 Nørager,
Denmark
Tel. +45 9672 1155
Fax +45 9855 1940